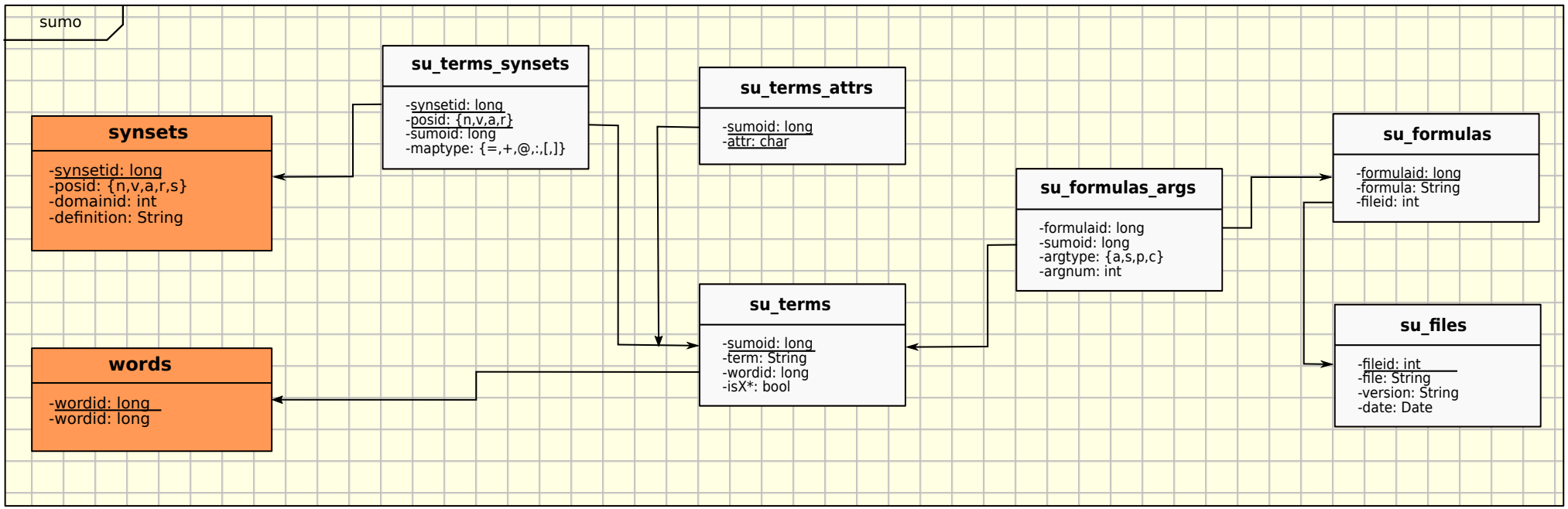
sumo
su_terms_synsets
-synsetid: long
-posid: {n,v,a,r}
-sumoid: long
-maptype: {=,+,@,:,[,]}
su_terms_attrs
-sumoid: long
-attr: char
synsets
-synsetid: long
-posid: {n,v,a,r,s}
-domainid: int
-definition: String
su_formulas
-formulaid: long
-formula: String
-fileid: int
su_formulas_args
-formulaid: long
-sumoid: long
-argtype: {a,s,p,c}
-argnum: int
su_terms
-sumoid: long
-term: String
-wordid: long
-isX*: bool
su_files
-fileid: int
-file: String
-version: String
-date: Date
words
-wordid: long
-wordid: long